ELEKTRON ERMA-STRMEC

ELECTRONICS
REGULATION
MEASUREMENT
AUTOMATION

INSTRUCTIONS

SHEATHED (MANTEL) THERMOMETERS

TO

ORDER NUMBERS

- **TO3x.1xx**

www.elektron.hr
info@elektron.hr

Hrvatska

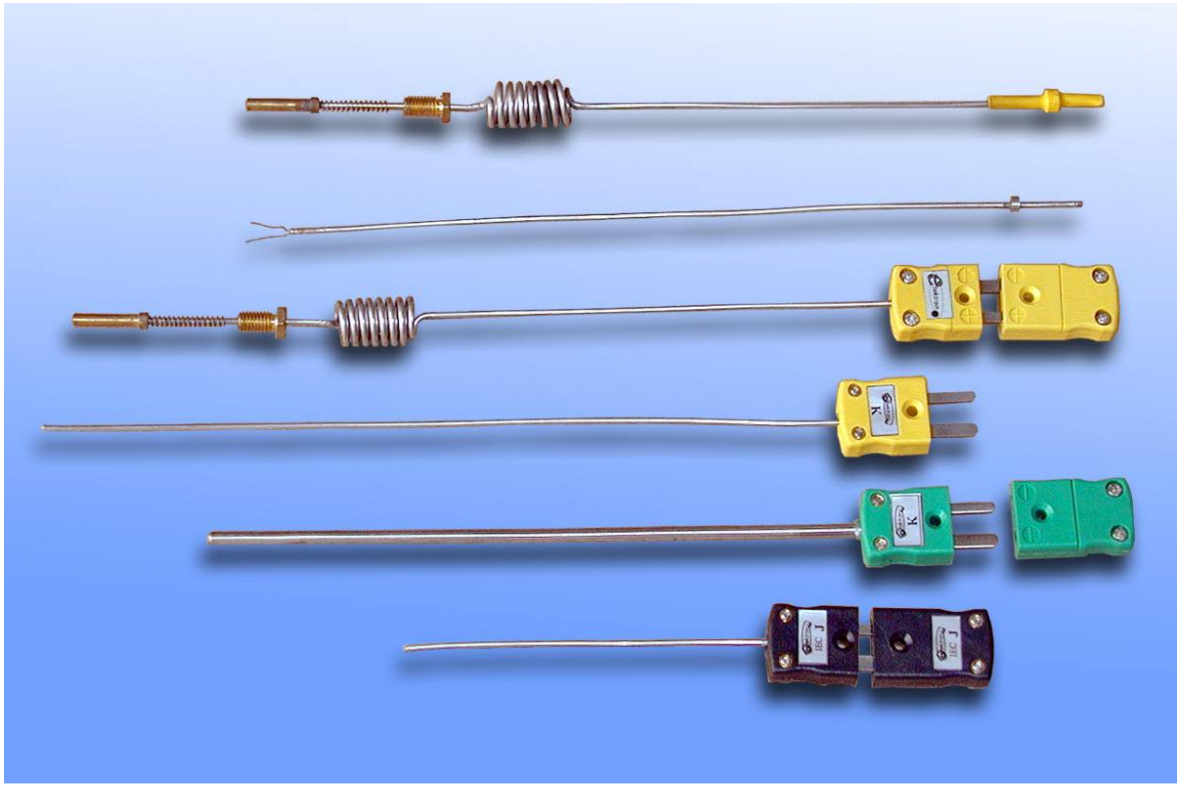

Basic characteristics:

- Operating temperature up to 1150 °C
- Dimensions 50 - 2000 mm
- Available with a transmitter (4-20mA)
- Pt100 temperature sensors according to DIN EN 60751
- Thermocouples according to DIN EN 60584 or DIN 43710th

CONTENTS

1 TECHNICAL SPECIFICATIONS ERROR! BOOKMARK NOT DEFINED.

2 ORDER NUMBERS ERROR! BOOKMARK NOT DEFINED.

3 DIMENSIONS ERROR! BOOKMARK NOT DEFINED.

1 TECHNICAL DATA

Connection head	Tip F	
Connection thread	1/2"	
Measuring element	Pt 100	to 400 °C
	Pt 1000	to 400 °C
	Fe-CuNi	to 900 °C
	Ni-CrNi	to 1150 °C
Sheath tube	Inkonel	
Standard lenghts [L]	L = 500 mm	
	L = 1000 mm	
	L = 1500 mm	
	L = 2000 mm	
	Compression fitting supplied only on request	

2 ORDER NUMBERS

Sheathed (mantel) thermometers	TD	x	x	x	x	x
Connection head	1500mm / metal braid	2				
	2500mm / metal braid	3				
	1500mm / silicone	5				
	2500mm / silicone	6				
	1500mm / teflon	8				
	2500mm / teflon	9				
	Head type F	H				
	connector standard M.	D				
	connector standard F.	E				
	Connector mini M.	F				
	Connector mini F.	G				
	On request	Z				
Type of sensor	Pt 100	1				
	Pt 1000	2				
	Fe-CuNi	3				
	Ni-CrNI	4				
Connection	No connection	0				
	G 1/2"	1				
	G 1"	2				
	On request	Z				
Diameter of mantel	1.5 mm	1				
	3 mm	2				
	6 mm	3				
	4,5 mm	4				
Length measurement part (L)	500 mm	1				
	1000 mm	2				
	1500 mm	3				
	2000 mm	4				
	5000 mm	5				
	On request	Z				

3 DIMENSIONS

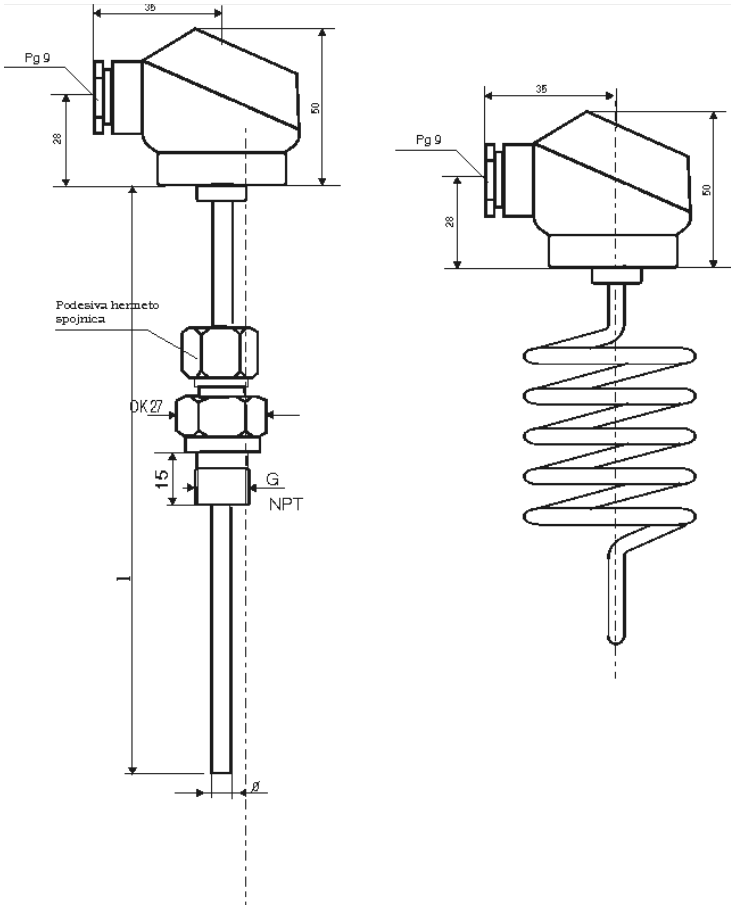

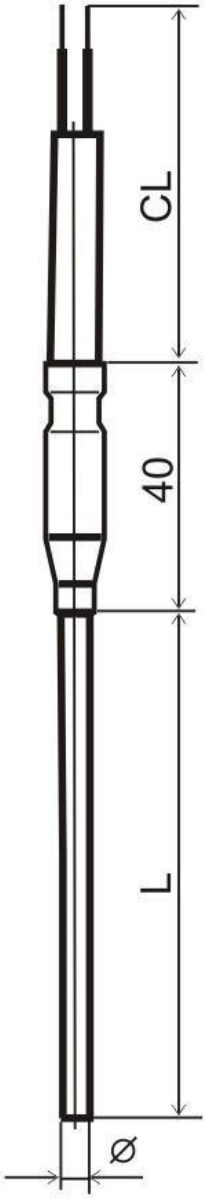

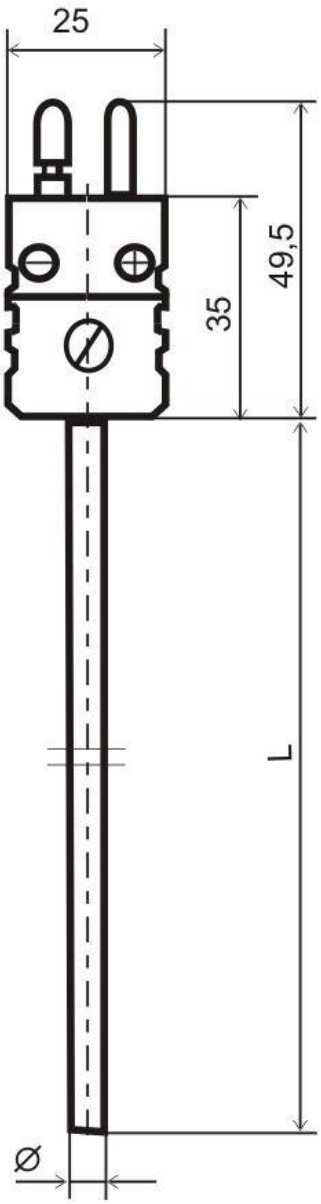

ELEKTRON ERMA - STRMEC d.o.o.
49244 STUBIČKE TOPLICE
Strmec 182
Hrvatska
MB 1004026

Tel. +385 (0)49 282-322
Fax.+385 (0)49 282-302
Žiro račun: 2360000-1101395925 ZGB
E-mail: info@elektron.hr
Web: www.elektron.hr